FO-50360-L

CW-B9726

REV	DOCUMENT	CHANGED BY	CHECK
2	201799	JLH 22NOV00	SAV
3	207443	TSM 17FEB03	SAV
4	0001305	CSL 2SEP03	SAV

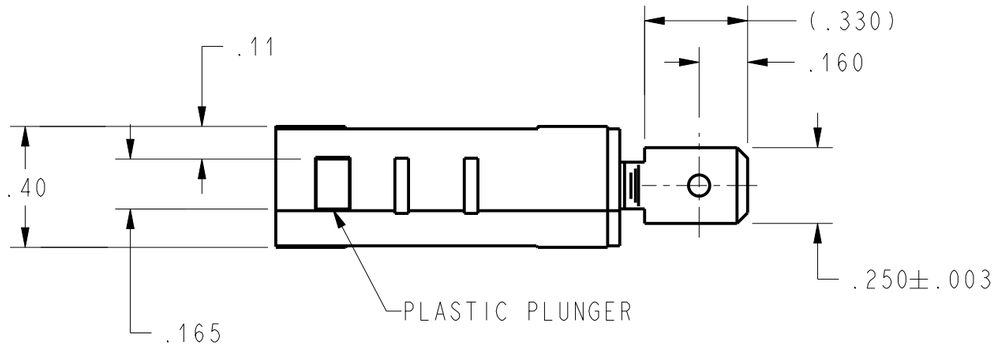

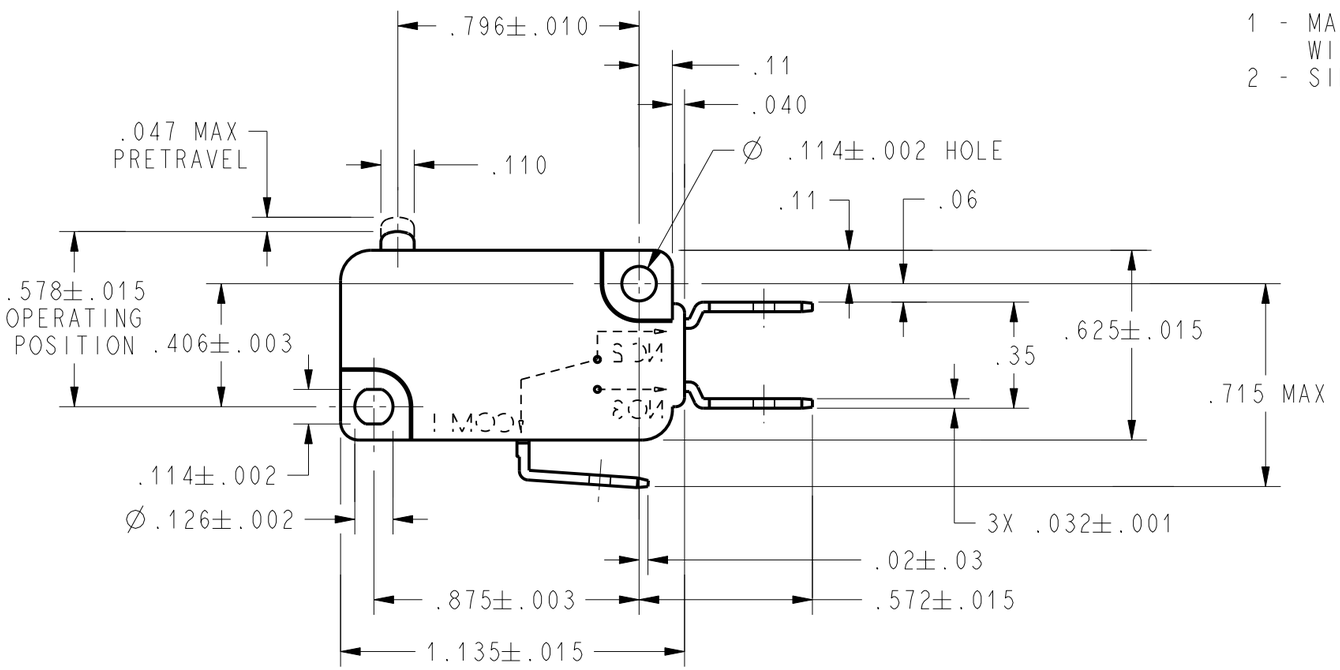

NOTES

1 - MAXIMUM MECHANICAL DEAD BREAK OF .0025 MAY BE EXPECTED WITH THIS SWITCH CONSTRUCTION
2 - SILVER PLATED TERMINALS REQUIRED

CHARACTERISTICS	
OPERATING FORCE	225 GRAMS MAX
RELEASE FORCE	20 GRAMS MIN
DIFFERENTIAL TRAVEL	.010 MAX
OVERTRAVEL	.050 MIN
FREE POSITION	.625 MAX
RELEASE TRAVEL	.010 MIN

ELECTRICAL DATA

CONTACT ARRANGEMENT
S P D T

25A, 277 VAC
1HP, 125 VAC
2HP, 250 VAC

20 (5) ~ / 250
T85 1E5 μ

UNLESS OTHERWISE SPECIFIED TOLERANCES ARE: [X] US(inch) CUSTOMARY [ ] SI(mm) METRIC

NO PLACE	X	±.040	±1
ONE PLACE	.X	±.030	±0,4
TWO PLACE	.XX	±.015	±0,15
THREE PLACE	.XXX	±.005	±
ANGLES		±	±

RAW MATERIAL-COMMERCIAL STANDARD

THIRD ANGLE PROJECTION

DRAWN	JLH	22NOV00
CHECK	SAV	22NOV00

THIS DRAWING COVERS A PROPRIETARY ITEM AND IS THE PROPERTY OF HONEYWELL. THIS DRAWING IS NOT TO BE COPIED OR USED WITHOUT THE PERMISSION OF HONEYWELL.

DIMENSIONS ARE TO BE MET BEFORE PROTECTIVE COATINGS ARE APPLIED

PTC 2D | ASME Y14.5M-1994

Honeywell

TITLE
SWITCH, BASIC

SIZE	DWG TYPE	DRAWING NAME	REV
B	I	V7-1Z19E9-000-1	4

SCALE NONE | WEIGHT | SHEET 1 OF 1