FO-50360-L

CW-B9757

REV	DOCUMENT	CHANGED BY	CHECK
1	207556	CSL 4MAR03	SAV

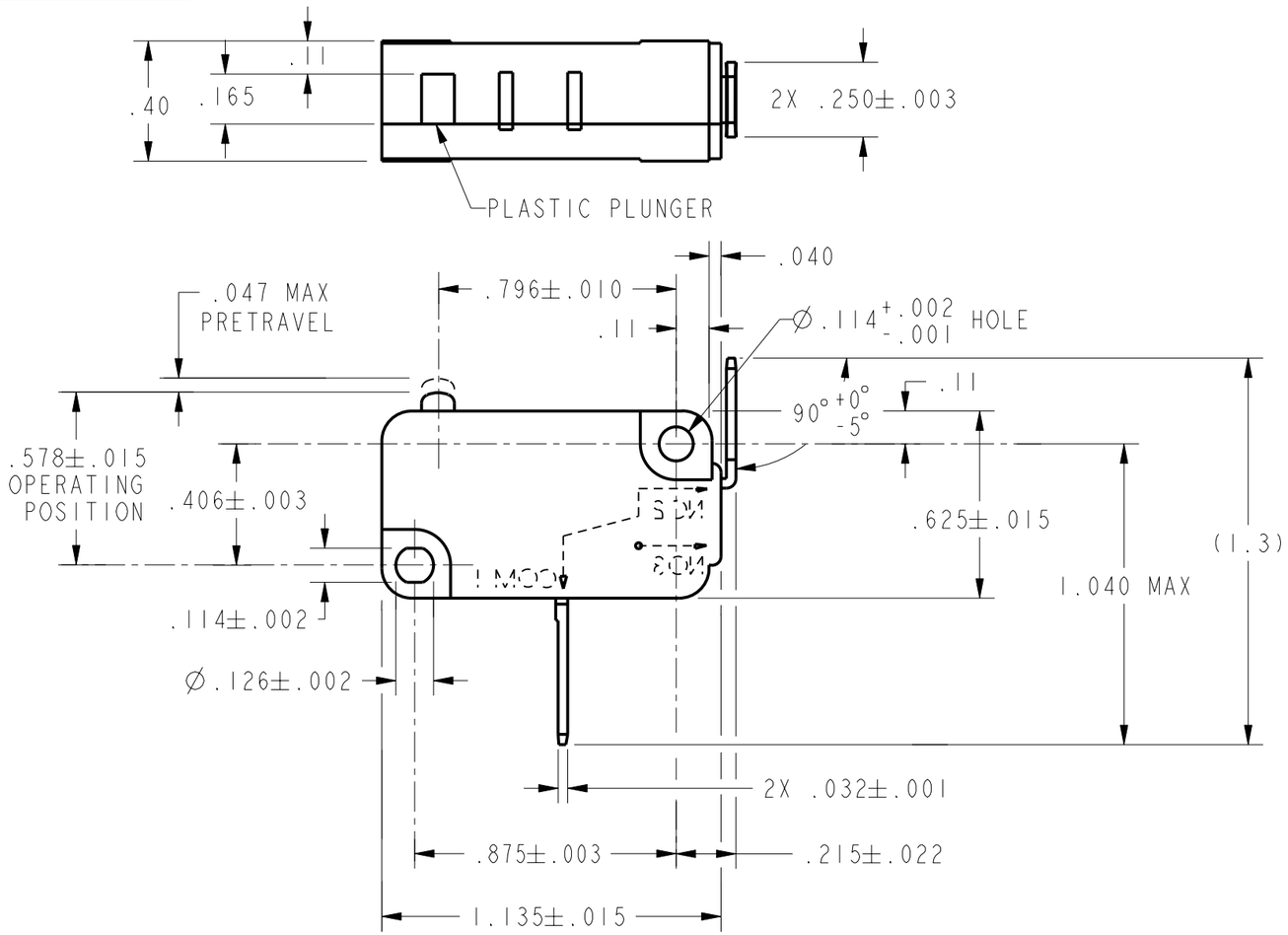

NOTES
1 - MAXIMUM MECHANICAL DEAD BREAK OF .0025 MAY BE EXPECTED WITH THIS SWITCH CONSTRUCTION
2 - SWITCH MATERIALS WILL WITHSTAND 150°C

CHARACTERISTICS
OPERATING FORCE----225 GRAMS MAX
RELEASE FORCE ----- 20 GRAMS MIN
DIFFERENTIAL TRAVEL------.010 MAX
OVERTRAVEL----------.050 MIN
FREE POSITION----------.625 MAX
RELEASE TRAVEL----------.010 MIN

ELECTRICAL DATA
CONTACT ARRANGEMENT S P D T
25A, 277 VAC 1HP, 125 VAC 2HP, 250 VAC

UNLESS OTHERWISE SPECIFIED TOLERANCES ARE: [X] US(inch) CUSTOMARY [ ] SI(mm) METRIC

NO PLACE	X	±.040	±1
ONE PLACE	.X	±.030	±0,4
TWO PLACE	.XX	±.015	±0,15
THREE PLACE	.XXX	±.005	±
ANGLES		±	±

RAW MATERIAL-COMMERCIAL STANDARD

THIRD ANGLE PROJECTION

DRAWN	CSL	4MAR03
CHECK	SAV	4MAR03

THIS DRAWING COVERS A PROPRIETARY ITEM AND IS THE PROPERTY OF HONEYWELL. THIS DRAWING IS NOT TO BE COPIED OR USED WITHOUT THE PERMISSION OF HONEYWELL.

DIMENSIONS ARE TO BE MET BEFORE PROTECTIVE COATINGS ARE APPLIED

PTC 2D | ASME Y14.5M-1994

Honeywell

TITLE
SWITCH, BASIC

SIZE	DWG TYPE	DRAWING NAME	REV
B	1	V7-1Z33E988	1

SCALE 2:1 | WEIGHT | SHEET 1 OF 1