FO-50360-L

CW-B3119

REV	DOCUMENT	CHANGED BY	CHECK
1	207373	TSM 5FEB03	SAV

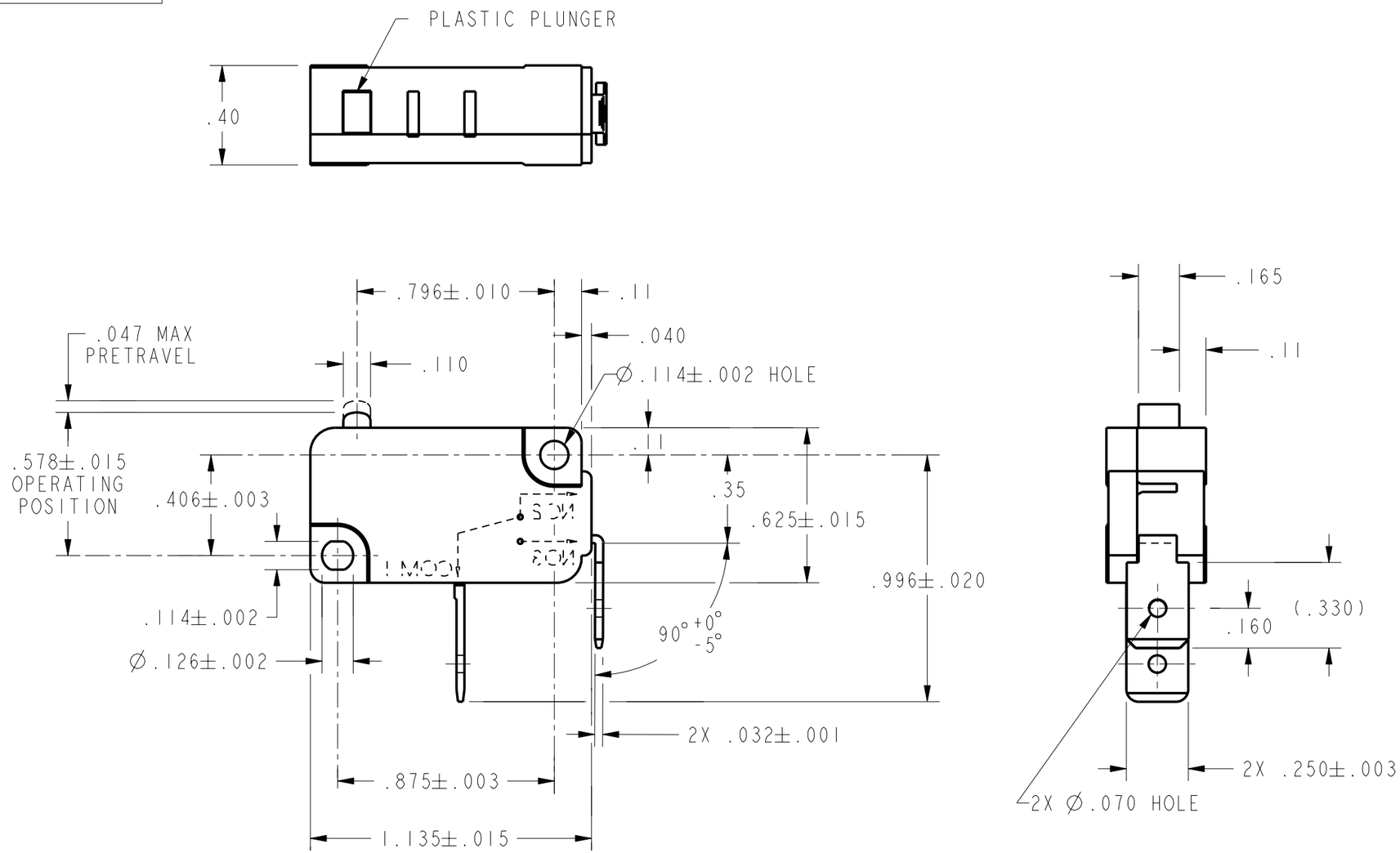

CHARACTERISTICS	
OPERATING FORCE	75 GRAMS MAX
RELEASE FORCE	10 GRAMS MIN
DIFFERENTIAL TRAVEL	.002-.010
OVERTRAVEL	.050 MIN
FREE POSITION	.625 MAX
RELEASE TRAVEL	.010 MIN

ELECTRICAL DATA

CONTACT ARRANGEMENT
S P N O

L156
11A 1/3HP 125, 250 OR 277 VAC
1/2A 125 VDC, 1/4A 250 VDC
4A 125 VAC "L"

UNLESS OTHERWISE SPECIFIED TOLERANCES ARE: [X] US(inch) CUSTOMARY [ ] SI(mm) METRIC

NO PLACE	X	±.040	±1
ONE PLACE	.X	±.030	±0.4
TWO PLACE	.XX	±.015	±0.15
THREE PLACE	.XXX	±.005	±
ANGLES		±	±

RAW MATERIAL-COMMERCIAL STANDARD

THIRD ANGLE PROJECTION

DRAWN	TSM	5FEB03
CHECK	SAV	5FEB03

THIS DRAWING COVERS A PROPRIETARY ITEM AND IS THE PROPERTY OF HONEYWELL. THIS DRAWING IS NOT TO BE COPIED OR USED WITHOUT THE PERMISSION OF HONEYWELL.

DIMENSIONS ARE TO BE MET BEFORE PROTECTIVE COATINGS ARE APPLIED

PTC 2D | ASME Y14.5M-1994

Honeywell

TITLE
SWITCH, BASIC

SIZE	DWG TYPE	DRAWING NAME	REV
B	1	V7-2B27D94	1

SCALE 2 : 1 | WEIGHT | SHEET 1 OF 1