FO-50360-L

CW-B0276

REV	DOCUMENT	CHANGED BY	CHECK
1	JOB18433	TSM 23APR01	SAV
2	204333	GJW 15NOV01	SAV

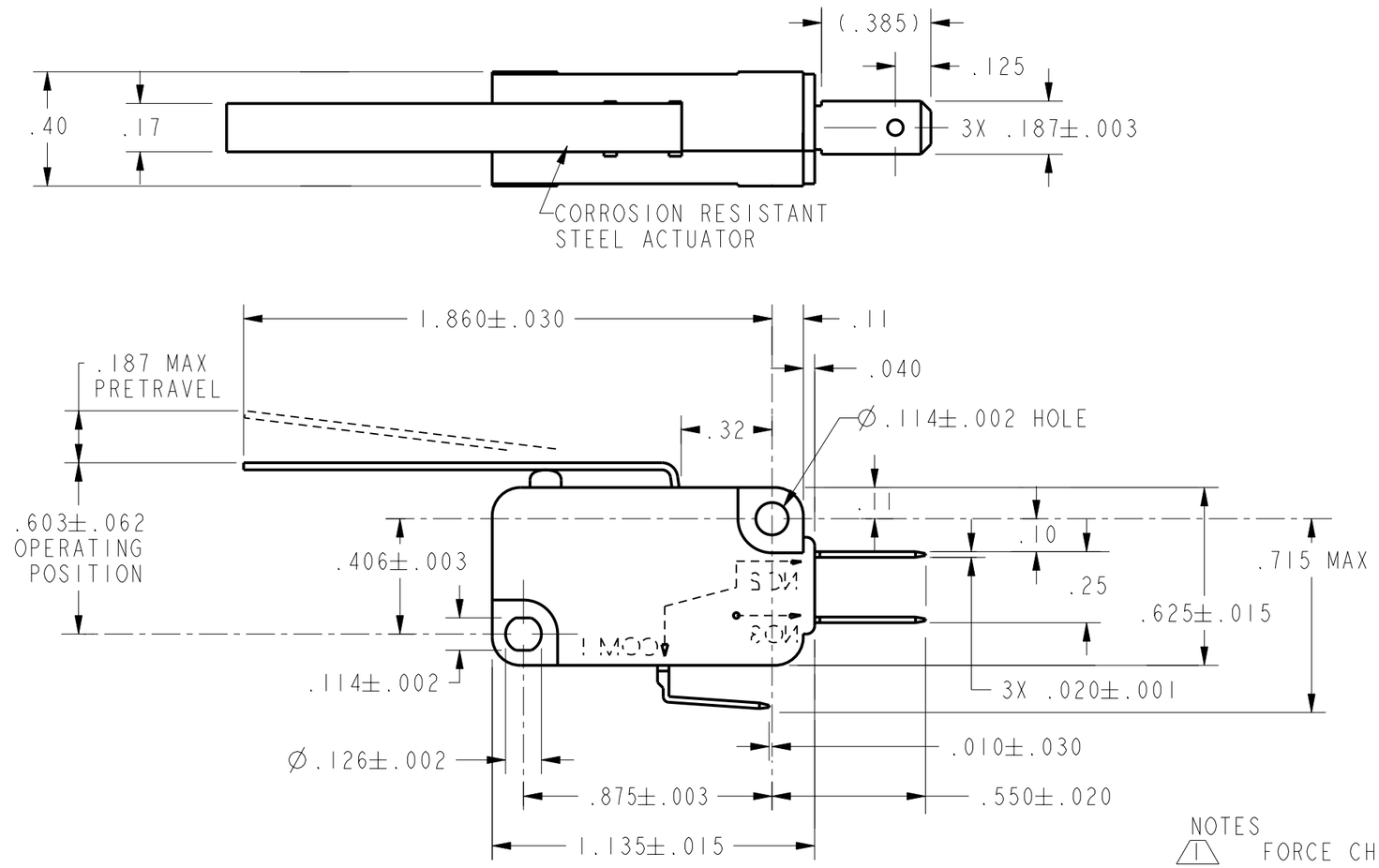

NOTES

1 2 - FORCE CHARACTERISTICS TAKEN WITH SWITCH MOUNTING SURFACE HORIZONTAL THE MASS OF THE LEVER MAY PREVENT PLUNGER FROM RETURNING THE LEVER TO FREE POSITION

CHARACTERISTICS 1	
OPERATING FORCE-----	20 GRAMS MAX
RELEASE FORCE--------	1 GRAMS MIN
DIFFERENTIAL TRAVEL-------	.041 MAX
OVERTRAVEL----------	.097 MIN
RELEASE TRAVEL----------	.023 MIN

ELECTRICAL DATA

CONTACT ARRANGEMENT
S P D T

L162
5A 125, 250, 277 VAC
1/10HP 250 VAC

UNLESS OTHERWISE SPECIFIED TOLERANCES ARE: [X] US(inch) CUSTOMARY [ ] SI(mm) METRIC

NO PLACE	X	±.040	±1
ONE PLACE	.X	±.030	±0,4
TWO PLACE	.XX	±.015	±0,15
THREE PLACE	.XXX	±.005	±
ANGLES		± 3°	±

RAW MATERIAL-COMMERCIAL STANDARD

THIRD ANGLE PROJECTION

DRAWN	TSM	23APR01
CHECK	SAV	23APR01

THIS DRAWING COVERS A PROPRIETARY ITEM AND IS THE PROPERTY OF HONEYWELL SENSING AND CONTROL. THIS DRAWING IS NOT TO BE COPIED OR USED WITHOUT THE PERMISSION OF HONEYWELL.

DIMENSIONS ARE TO BE MET BEFORE PROTECTIVE COATINGS ARE APPLIED

PTC 2D | ASME Y14.5M-1994

Honeywell
Sensing and Control

TITLE
SWITCH, BASIC

SIZE	DWG TYPE	DRAWING NAME	REV
B	1	V7-3A17D8-040	2

SCALE 2:1 | WEIGHT | SHEET 1 OF 1