FO-50360-L

CW-B0038

REV	DOCUMENT	CHANGED BY	CHECK
1	JOB18566	GJW 04JUN01	
2	JOB18670	TSM 12JUL01	
3	204854	TSM 07FEB02	SAV

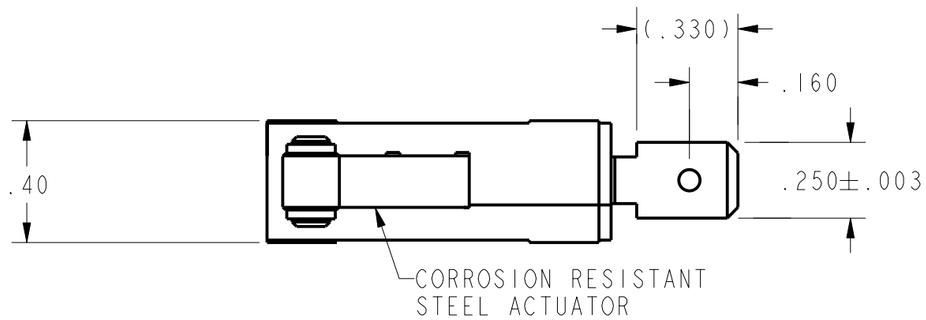

NOTES

1. Ø.19 X .19 WIDE OIL BRONZE ROLLER (CONCENTRICITY .005 FIM)

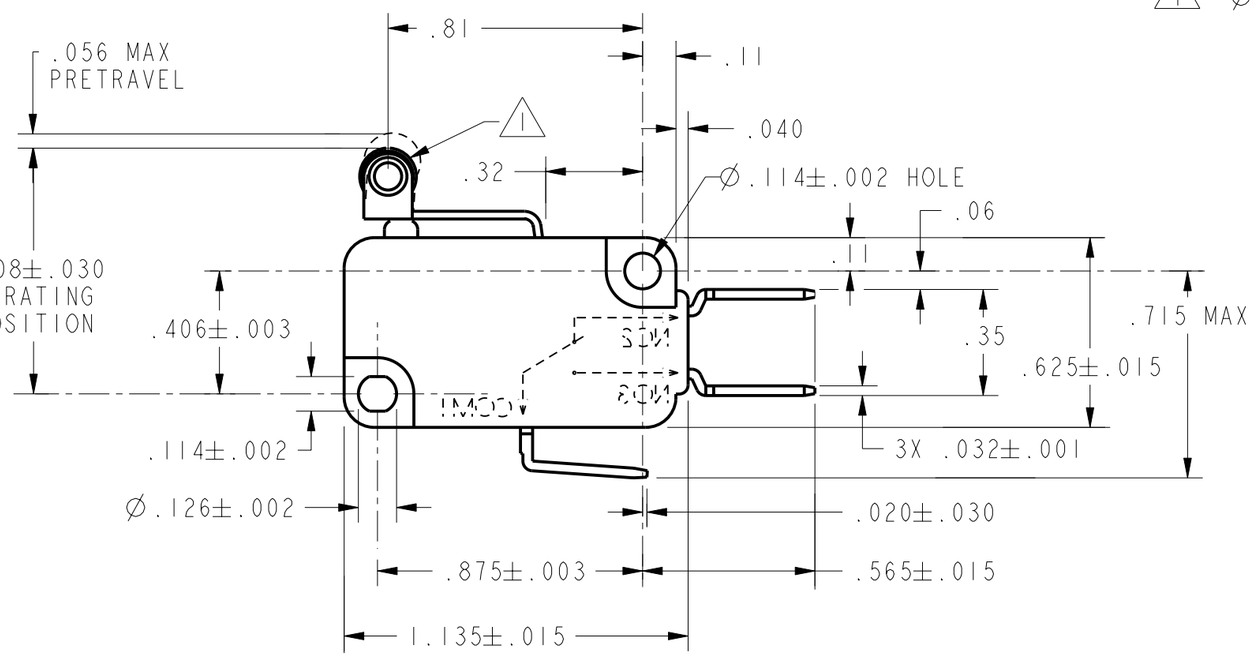

CHARACTERISTICS	
OPERATING FORCE	459 GRAM MAX
RELEASE FORCE	88 GRAM MIN
DIFFERENTIAL TRAVEL	.013 MAX
OVERTRAVEL	.034 MIN
RELEASE TRAVEL	.008 MIN

ELECTRICAL DATA

CONTACT ARRANGEMENT
S P D T

L156
11A 1/3HP 125, 250 OR 277 VAC
1/2A 125 VDC, 1/4A 250 VDC
4A 125 VAC "L"

10 (3) / 250 ~ T85 1E5 µ

UNLESS OTHERWISE SPECIFIED TOLERANCES ARE: [X] US(inch) CUSTOMARY [ ] SI(mm) METRIC

NO PLACE	X	±.040	±1
ONE PLACE	.X	±.030	±0.4
TWO PLACE	.XX	±.015	±0.15
THREE PLACE	.XXX	±.005	±
ANGLES		±	±

RAW MATERIAL-COMMERCIAL STANDARD

THIRD ANGLE PROJECTION

DRAWN	GJW	04JUN01
CHECK	SAV	04JUN01

THIS DRAWING COVERS A PROPRIETARY ITEM AND IS THE PROPERTY OF HONEYWELL. THIS DRAWING IS NOT TO BE COPIED OR USED WITHOUT THE PERMISSION OF HONEYWELL.

DIMENSIONS ARE TO BE MET BEFORE PROTECTIVE COATINGS ARE APPLIED

PTC 2D | ASME Y14.5M-1994

Honeywell

TITLE
SWITCH, BASIC

SIZE	DWG TYPE	DRAWING NAME	REV
B	1	V7-6B19E9-201	3

SCALE NONE | WEIGHT | SHEET 1 OF 1