Honeywell

FED.MFG.CODE 91929

SWITCH–BASIC

CATALOG LISTING

V7–6C17D8–263

CW–C6023

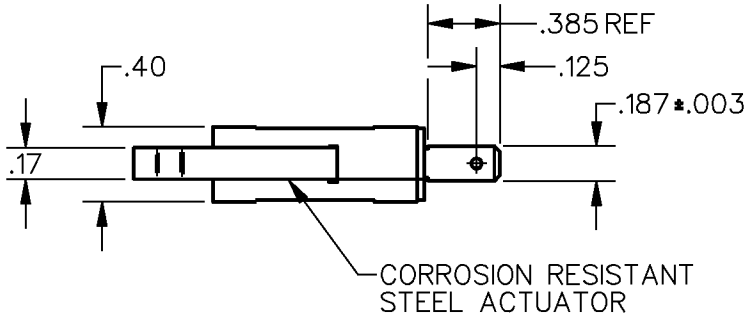

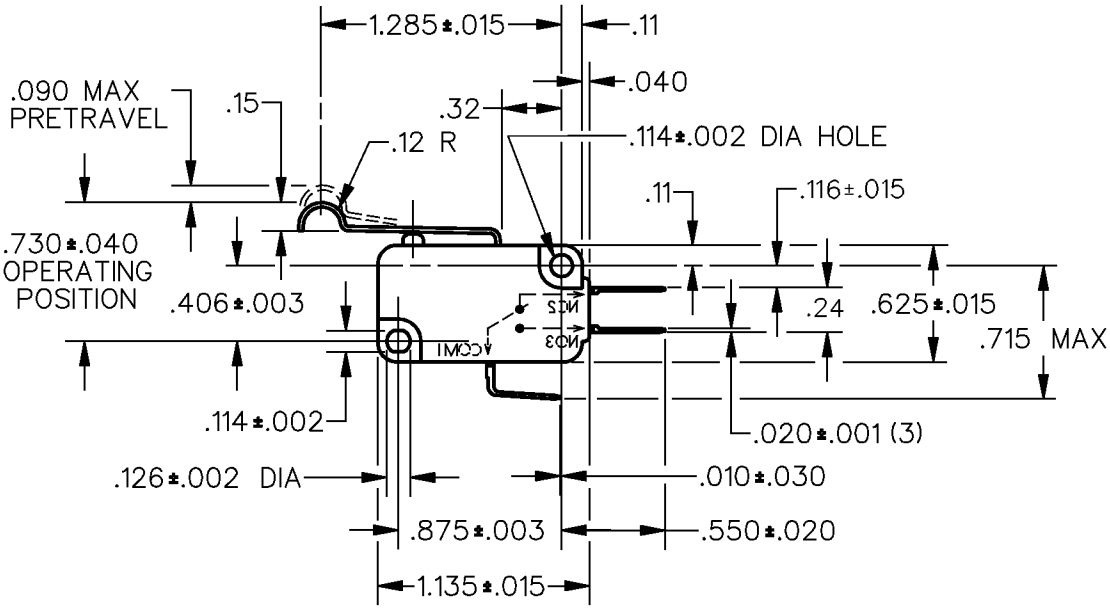

THIS DRAWING COVERS A PROPRIETARY ITEM AND IS THE PROPERTY OF HONEYWELL.
THIS DRAWING IS NOT TO BE COPIED OR USED WITHOUT THE APPROVAL OF HONEYWELL.

THIRD ANGLE PROJECTION

CHARACTERISTICS	ELECTRICAL DATA	SCALE – DO NOT SCALE PRINT
OPERATING FORCE — — — — 8 OZ MAX	CONTACT ARRANGEMENT S P D T	UNLESS OTHERWISE SPECIFIED TOLERANCES ARE
RELEASE FORCE — — — — — 2 OZ MIN	L215 15.1A 1/2HP 125, 250 OR 277 VAC 1/2A 125 VDC 1/4A 250 VDC; 5A 125 VAC "L"	ONE PLACE (.0) ±.030
DIFFERENTIAL TRAVEL — — — .065 MAX		TWO PLACE (.00) ±.015
OVERTRAVEL — — — — — — .080 MIN		THREE PLACE (.000) ±.005
RELEASE TRAVEL — — — — — .015 MIN		ANGLES ±
		WEIGHT

CATALOG LISTING V7–6C17D8–263 PAGE 1 OF 1

RELEASE NO. PR–17243 REPLACES

ISSUE 9

REVISIONS			
A	CO 66350	JAP 20 SEP 89	11JUL08
B	CO–69205	BAB 7 JAN 91	
C	CO 70247	JAP 20 JUN 91	ASD
D	CO 76418	DCS 9 DEC 93	
E	OBS 79950	CSL 15 MAR 95	5 APR 89
F	RE–IN PR22394	DCS 6 SEP 96	
G	0041190	PK 11JUL08	
H	0086919	VKR 28FEB12	

CHECK ASD CHECK JAP CHECK

DRAWN SDF 4 APR 89

RASTER