FO-50360-L

CW-C6145

REV	DOCUMENT	CHANGED BY	CHECK
2	202141	GJW 11JAN01	SAV
3	203143	GJW 24MAY01	SAV
4	203626	GJW 31JUL01	MDM
5	205725	TSM 4JUN02	SAV

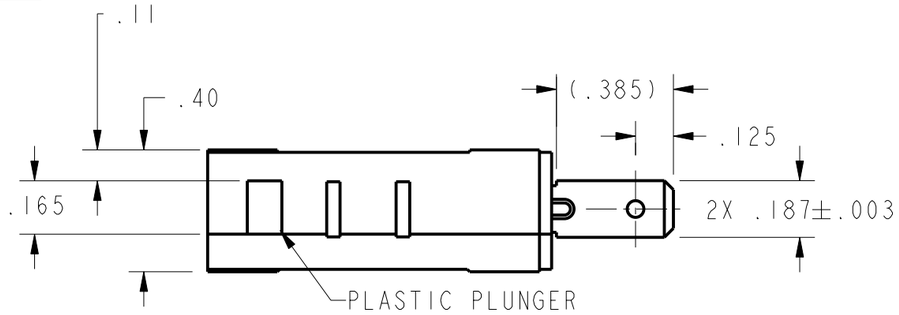

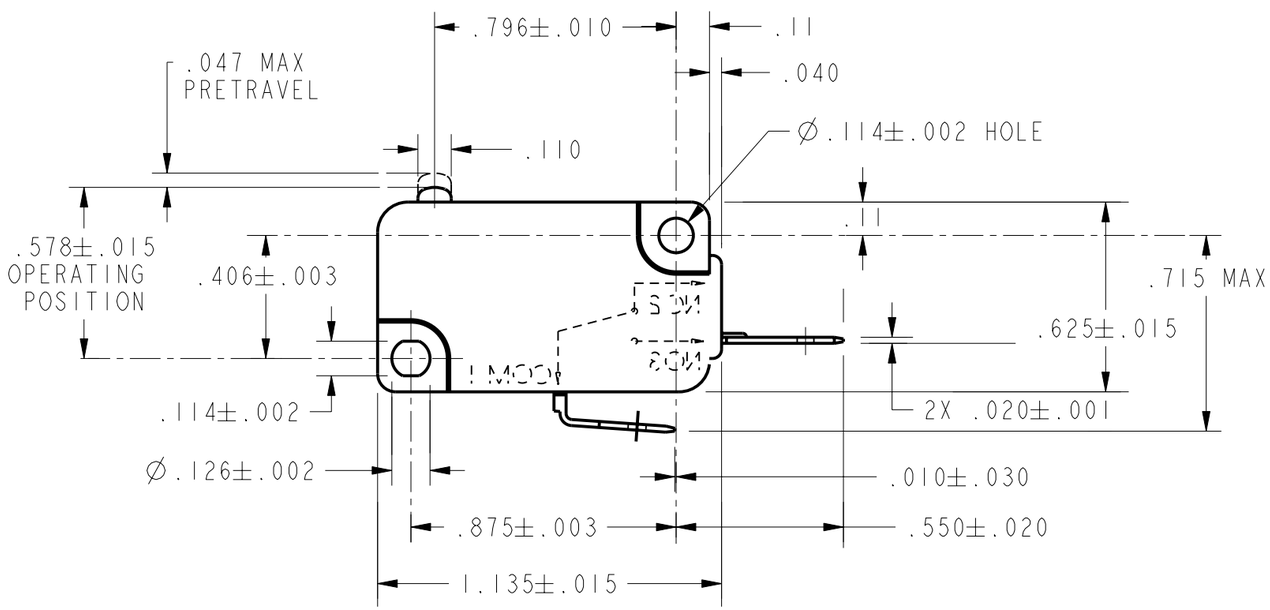

CHARACTERISTICS	
OPERATING FORCE	8 OZ MAX
RELEASE FORCE	2 OZ MIN
DIFFERENTIAL TRAVEL	.002-.010
OVERTRAVEL	.050 MIN
FREE POSITION	.625 MAX
RELEASE TRAVEL	.010 MIN

ELECTRICAL DATA

CONTACT ARRANGEMENT
S P N O

L156
11A 1/3HP 125, 250 OR 277 VAC
1/2A 125 VDC, 1/4A 250 VDC
4A 125 VAC "L"

10 (3) / 250 ~ T85 5E4 µ

UNLESS OTHERWISE SPECIFIED TOLERANCES ARE: [X] US(inch) CUSTOMARY [ ] SI(mm) METRIC

NO PLACE	X	±.040	±1
ONE PLACE	.X	±.030	±0.4
TWO PLACE	.XX	±.015	±0.15
THREE PLACE	.XXX	±.005	±
ANGLES		±	±

RAW MATERIAL-COMMERCIAL STANDARD

THIRD ANGLE PROJECTION

DRAWN	GJW	11JAN01
CHECK	SAV	11JAN01

THIS DRAWING COVERS A PROPRIETARY ITEM AND IS THE PROPERTY OF HONEYWELL. THIS DRAWING IS NOT TO BE COPIED OR USED WITHOUT THE PERMISSION OF HONEYWELL.

DIMENSIONS ARE TO BE MET BEFORE PROTECTIVE COATINGS ARE APPLIED

PTC 2D | ASME Y14.5M-1994

Honeywell

TITLE
SWITCH, BASIC

SIZE	DWG TYPE	DRAWING NAME	REV
B	1	V7-7B29D8	5

SCALE NONE | WEIGHT | SHEET 1 OF 1