FO-50360-L

CW-C6146

REV	DOCUMENT	CHANGED BY		CHECK
2	202141	GJW	18JAN01	SAV
3	203143	GJW	23MAY01	SAV
4	203626	GJW	31JUL01	MDM

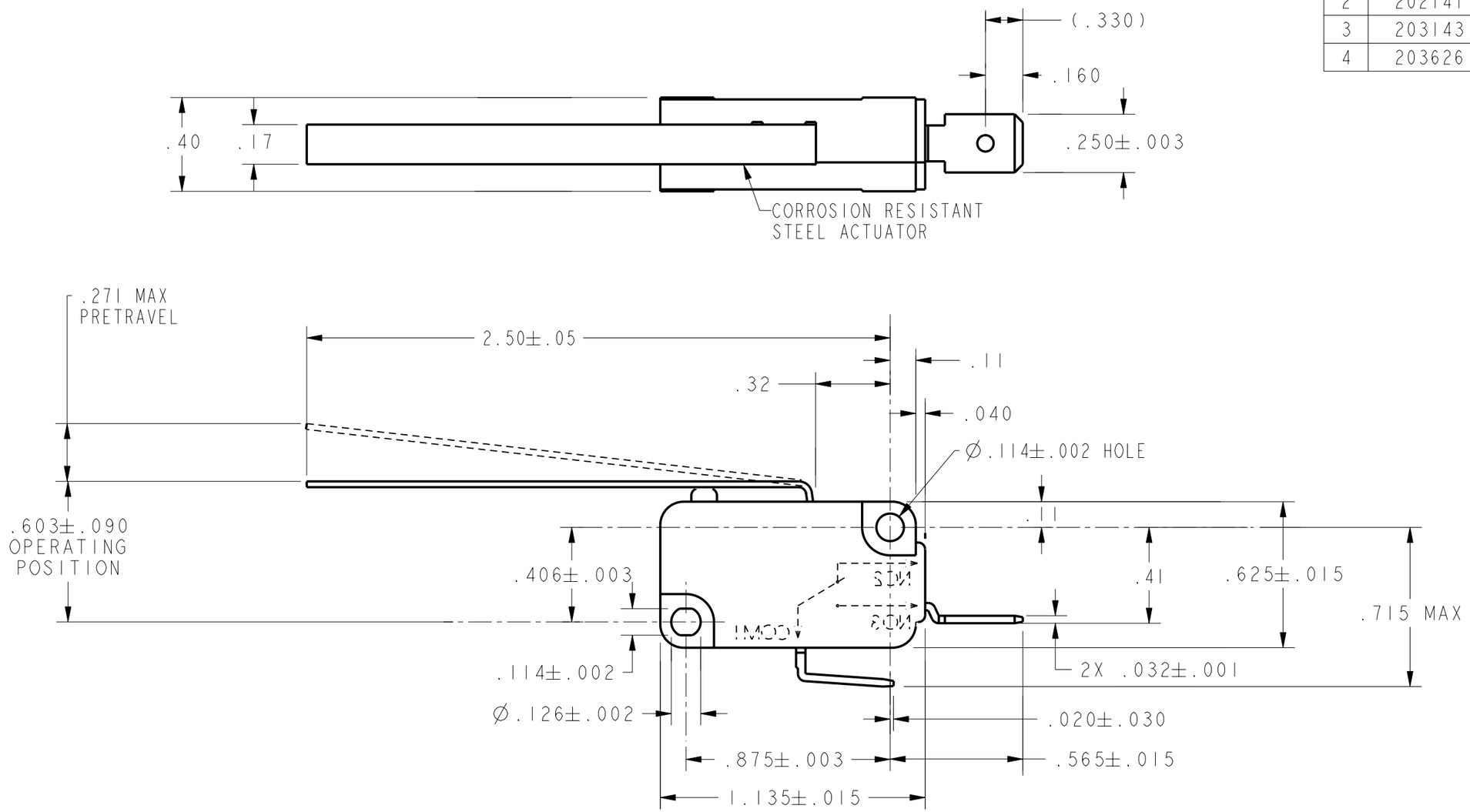

CHARACTERISTICS	
OPERATING FORCE	64 GRAMS MAX
RELEASE FORCE	8.5 GRAMS MIN
DIFFERENTIAL TRAVEL	.059 MAX
OVERTRAVEL	.132 MIN
RELEASE TRAVEL	.032 MIN

ELECTRICAL DATA

CONTACT ARRANGEMENT
S P N O

L156
11A 1/3HP 125, 250 OR 277 VAC
1/2A 125 VDC, 1/4A 250 VDC
4A 125 VAC "L"

10 (3) 250 T85 5E4

UNLESS OTHERWISE SPECIFIED TOLERANCES ARE: [X] US(inch) CUSTOMARY [ ] SI(mm) METRIC

NO PLACE	X	±.040	±1
ONE PLACE	.X	±.030	±0.4
TWO PLACE	.XX	±.015	±0.15
THREE PLACE	.XXX	±.005	±
ANGLES		±	±

RAW MATERIAL-COMMERCIAL STANDARD

THIRD ANGLE PROJECTION

DRAWN	GJW	18JAN01
CHECK	SAV	18JAN01

THIS DRAWING COVERS A PROPRIETARY ITEM AND IS THE PROPERTY OF HONEYWELL SENSING AND CONTROL. THIS DRAWING IS NOT TO BE COPIED OR USED WITHOUT THE PERMISSION OF HONEYWELL.

DIMENSIONS ARE TO BE MET BEFORE PROTECTIVE COATINGS ARE APPLIED

PTC 2D | ASME Y14.5M-1994

Honeywell
Sensing and Control

TITLE
SWITCH, BASIC

SIZE	DWG TYPE	DRAWING NAME	REV
B	1	V7-7B29E9-053	4

SCALE 2 : 1 | WEIGHT | SHEET 1 OF 1