FO-50360-L

**CW-C6152**

| REV | DOCUMENT | CHANGED BY | CHECK |
|---|---|---|---|
| 2 | 202141 | GJW 12JAN01 | SAV |
| 3 | 202601 | TSM 15MAR01 | SAV |
| 4 | 203143 | GJW 24MAY01 | SAV |
| 5 | 203626 | GJW 31JUL01 | SAV |

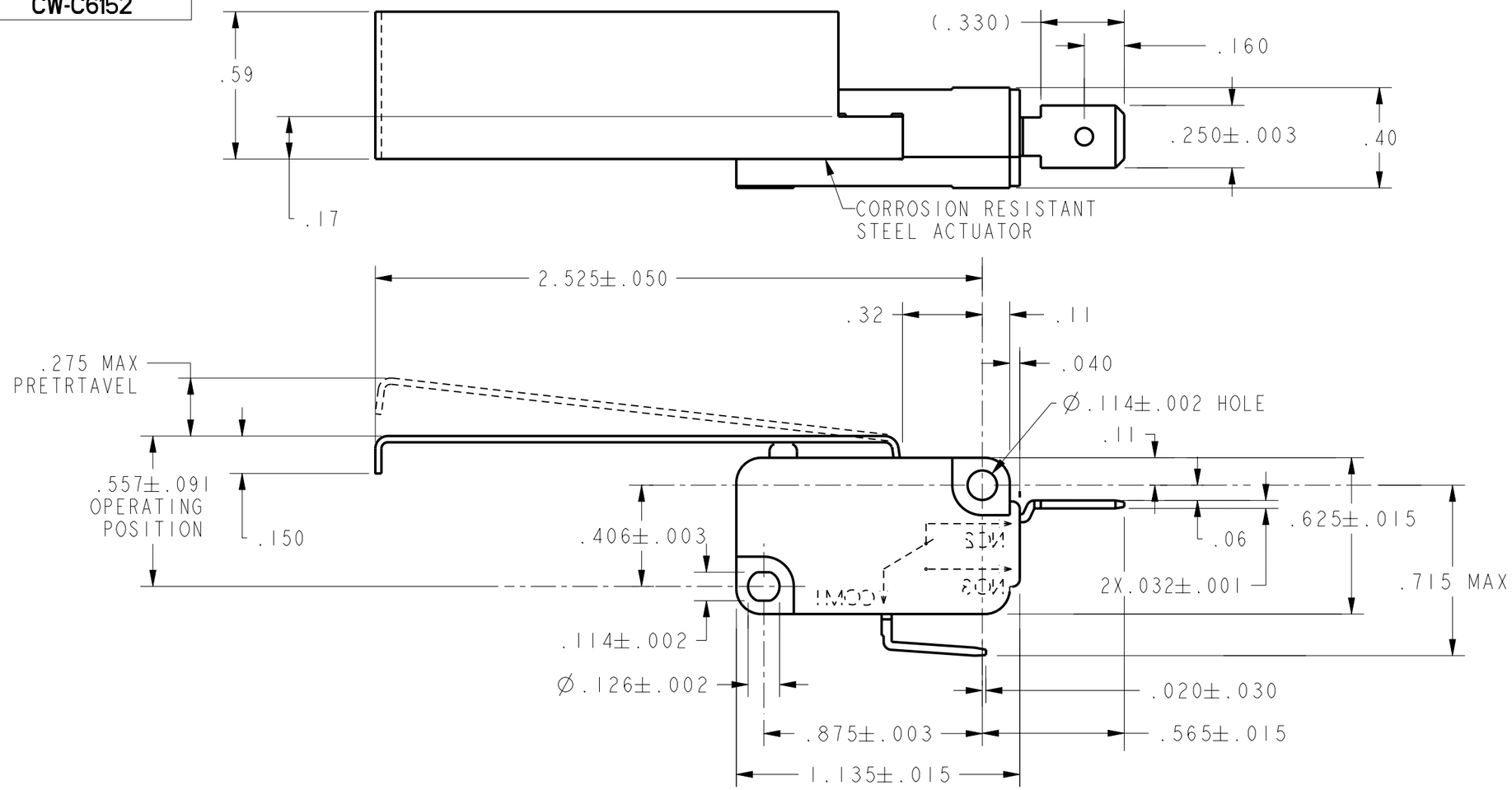


NOTE
1 - CAUTION: OVERTRAVEL FORCE ON LEVER MUST NOT RESULT IN AN OVERTRAVEL FORCE ON THE PLUNGER EXCEEDING FIVE POUNDS

| CHARACTERISTICS | |
|---|---|
| OPERATING FORCE | 63 GRAMS MAX |
| RELEASE FORCE | 8 GRAMS MIN |
| DIFFERENTIAL TRAVEL | .060 MAX |
| OVERTRAVEL | .066 MIN |
| RELEASE TRAVEL | .032 MIN |

**ELECTRICAL DATA**

CONTACT ARRANGEMENT
S P D T

L156
11A 1/3HP 125, 250 OR 277 VAC
1/2A 125 VDC, 1/4A 250 VDC
4A 125 VAC "L"

10 (3) 250 T85 5E4

UNLESS OTHERWISE SPECIFIED TOLERANCES ARE: [X] US(inch) CUSTOMARY [ ] SI(mm) METRIC

| | | | |
|---|---|---|---|
| NO PLACE | X | ±.040 | ±1 |
| ONE PLACE | .X | ±.030 | ±0.4 |
| TWO PLACE | .XX | ±.015 | ±0.15 |
| THREE PLACE | .XXX | ±.005 | ± |
| ANGLES | | ± | ± |

RAW MATERIAL-COMMERCIAL STANDARD

THIRD ANGLE PROJECTION

| | | |
|---|---|---|
| DRAWN | GJW | 12JAN01 |
| CHECK | SAV | 12JAN01 |

THIS DRAWING COVERS A PROPRIETARY ITEM AND IS THE PROPERTY OF HONEYWELL SENSING AND CONTROL. THIS DRAWING IS NOT TO BE COPIED OR USED WITHOUT THE PERMISSION OF HONEYWELL.

DIMENSIONS ARE TO BE MET BEFORE PROTECTIVE COATINGS ARE APPLIED

PTC 2D | ASME Y14.5M-1994

**Honeywell**
Sensing and Control

TITLE
**SWITCH, BASIC**

| SIZE | DWG TYPE | DRAWING NAME | REV |
|---|---|---|---|
| B | 1 | V7-7B39E9-434 | 5 |

SCALE 2:1 | WEIGHT | SHEET 1 OF 1