MICRO SWITCH
FREEPORT, ILLINOIS, U.S.A.
A DIVISION OF HONEYWELL
FED. MFG. CODE 91929

SWITCH-BASIC

CATALOG LISTING
WA-1RX12-A41

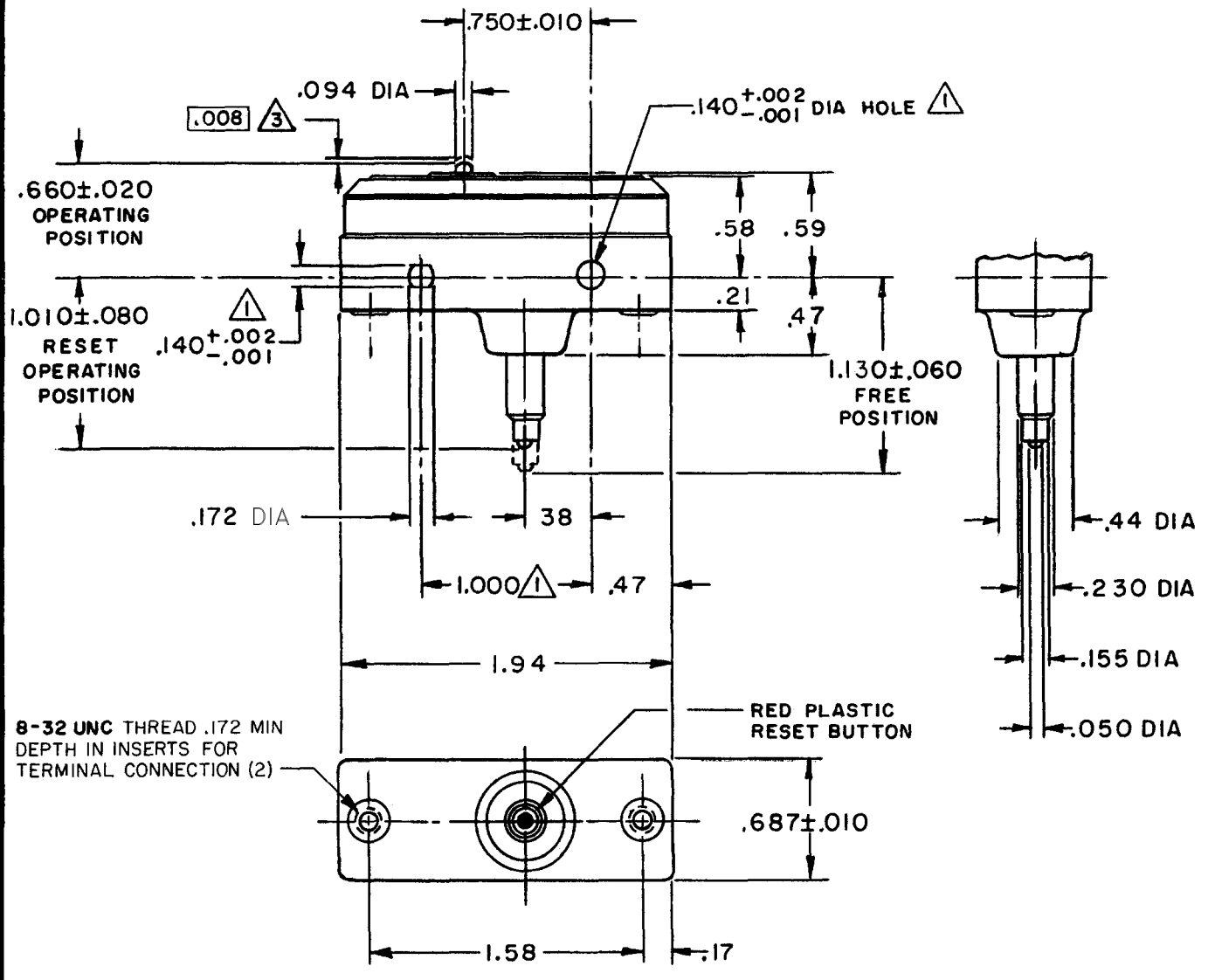

NOTES

1. MOUNTING HOLES WILL ACCEPT PINS OR SCREWS OF .139 MAX DIA ON 1.000±.002 CENTERS
2 – SWITCH WILL NOT RECYCLE OR ACT AS A MOMENTARY ACTION SWITCH IF PIN PLUNGER IS RELEASED WHEN RESET PLUNGER IS CONTINUALLY DEPRESSED
3. SWITCH MUST BE CAPABLE OF BEING RESET WHEN PIN PLUNGER IS RELEASED .008 FROM OPERATING POSITION
4 – CONTACT MATERIAL – FINE SILVER

THIS DRAWING COVERS A PROPRIETARY ITEM AND IS THE PROPERTY OF MICRO SWITCH, A DIVISION OF HONEYWELL. THIS DRAWING IS NOT TO BE COPIED OR USED WITHOUT THE APPROVAL OF MICRO SWITCH.

CHARACTERISTICS

OPERATING FORCE — — — — — 4–16 OZ
OVERTRAVEL — — — — — — .010 MIN

RESET CHARACTERISTICS
OPERATING FORCE — — — — 32 OZ MAX
OVERTRAVEL — — — — — — .040 MIN

ELECTRICAL DATA

CONTACT ARRANGEMENT
SINGLE POLE NORM CLOSED MAINTAINED CONTACT

L178
20A 125, 250, 277 VAC
3/4HP 125 VAC, 1 1/2HP 250 VAC

L288
L299
L308
20(3)A 250V ∿ T85 5E4

SCALE FULL
DO NOT SCALE PRINT

UNLESS OTHERWISE NOTED
DIMENSIONS ARE IN INCHES
TOLERANCES ARE:

ONE PLACE	(.0)	±.030
TWO PLACE	(.00)	±.015
THREE PLACE	(.000)	±.005
ANGLES		±

WEIGHT

DRAWN J A S 1 JUNE 87
CHECK GLH 4 JUN 87
CHECK
CHECK

REPLACES X84698-WA
RELEASE NO. PR-20502
DRAWING NUMBER WA-1RX12-A41 PAGE 1 OF 1
ISSUE 10

REVISIONS

A	C080462	JALA 11 JUN 95
B	C093346	DLT 23 SEP 98

FORMTEK