MICRO SWITCH
FREEPORT ILLINOIS, U.S.A
A DIVISION OF HONEYWELL
FED. MFG. CODE 91929

SWITCH-BASIC

CATALOG LISTING
YE-2RV248-D6

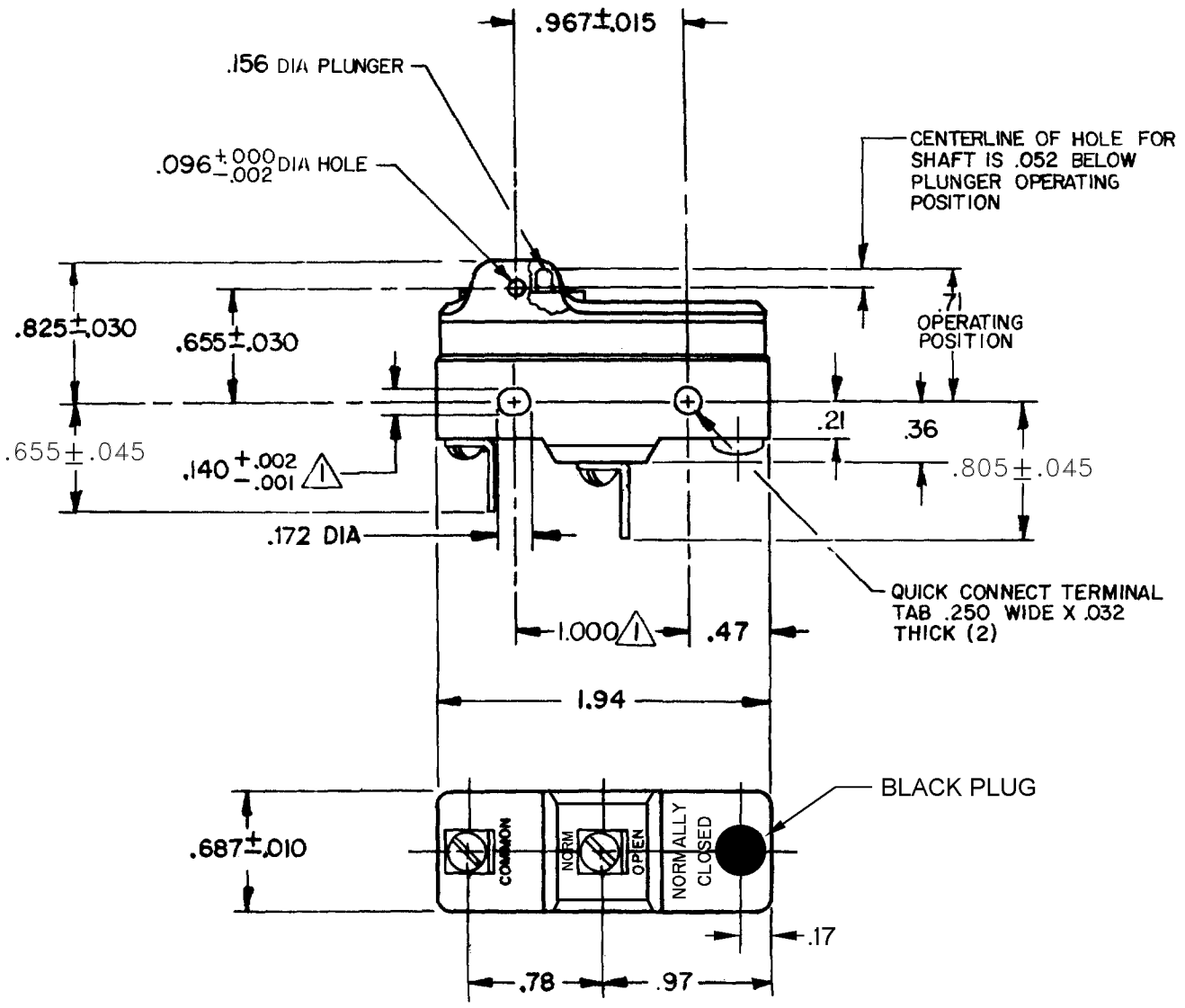

NOTES
1. MOUNTING HOLES WILL ACCEPT PINS OR SCREWS OF .139 MAX DIA ON 1.000±.002 CENTERS
2 - LEVER (1), AND PIN (1) FURNISHED UNASSEMBLED
3 - SWITCH WILL WITHSTAND TEMPERATURE OF 250°F

THIS DRAWING COVERS A PROPRIETARY ITEM AND IS THE PROPERTY OF MICRO SWITCH, A DIVISION OF HONEYWELL. THIS DRAWING IS NOT TO BE COPIED OR USED WITHOUT THE APPROVAL OF MICRO SWITCH.

THIRD ANGLE PROJECTION

CHARACTERISTICS

OPERATING FORCE----------15-21 OZ
RELEASE FORCE----------10-14 OZ
PRETRAVEL----------.050 MAX
DIFFERENTIAL TRAVEL-----.0020-.0075
OVERTRAVEL----------.010 MIN

ELECTRICAL DATA

CONTACT ARRANGEMENT
S P N O

25A 125, 250 480 VAC
1 HP 125 VAC, 2 HP 250 OR 480 VAC
PILOT DUTY
750 VA 480 VAC, MAX
60/75°C (Cu)

SCALE FULL
DO NOT SCALE PRINT

TOLERANCES
APPLY TO DESIGN UNITS. CONVERSIONS ARE ONLY FOR REFERENCE. UNLESS NOTED, TOLERANCES ARE ±

	DIM. mm	TOL. mm/in	DIM. in	TOL. mm/in
NO PLACES	X	1/.04		
ONE PLACE	X.X	0.4/.016	X.X	0.8/.03
TWO PLACES	X.XX	0.15/.006	X.XX	0.38/.015
THREE PLACES			X.XXX	0.13/.005
ANGLES				

DESIGN UNITS: SI METRIC ☐ US CUSTOMARY ☒

WEIGHT

CATALOG LISTING YE-2RV248-D6 PAGE 1 OF 1
ISSUE 6
REPLACES
RELEASE NO. PR-12762

REVISIONS

A	C080986	JALA 11 JUN 95
B	C092958	JAS 15 MAY 98
C	0000831	CSL 10 JUL 03

CHECK
CHECK 31 JAN 84 CEC
CHECK 30 JAN 84 JAS
DRAWN
RASTER